1.800.350.7152 ext 222
905.475.2225 ext 222
info@kcbgraphics.com

Formulate:
Accent 04

TOP
Total Graphic Area: 41.4"w X 28.5"h
Total Visual Area: 37.4"w X 24.5"h

BOTTOM
Total Graphic Area: 41.4"w X 42.2"h
Total Visual Area: 37.4"w X 38.2"h

Use separate template for formulate backwall graphic. This template only represents the accent graphics.

Please be sure to include the 2" bleed around the perimeter (note trim & stitch locations on template). DO NOT design any critical elements (text, logos, etc.) within 1" of the edge.

General Art Guidelines:
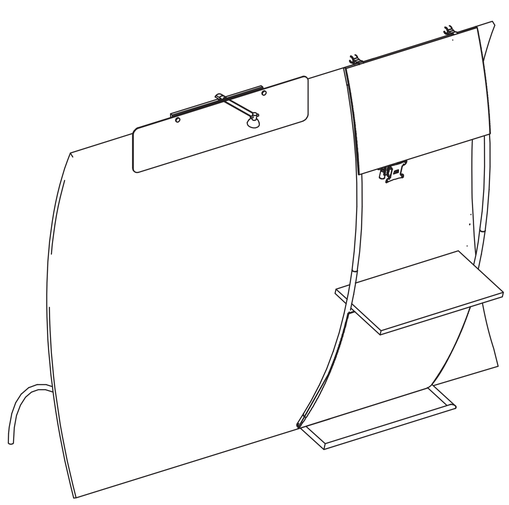
- CMYK Color Mode
- All Solid Coated Pantone colors should be called out in the art as spot colors
- Embed all images and support files
- Resolution must be 100-120 ppi
- All fonts must be created to outlines
- Do not scale artboard
- Background color/images must bleed to the edge of artboard
- Do not use spot colors from template in your artwork as they will not print