1.800.350.7152 ext 222
905.475.2225 ext 222
info@kcbgraphics.com

Formulate:
S6, Straight Wall

Total Graphic Area: 118"w X 95.5"h
Total Visual Area: 114"w X 91.5"h

Please be sure to include the 2" bleed around the perimeter (note trim & stitch locations on template). DO NOT design any critical elements (text, logos, etc.) within 2" of the edge.

Use separate template for ladder graphic panels. These only represent placement on this template.

Please consider obstructions such as the ladder when laying out your graphics.

General Art Guidelines:
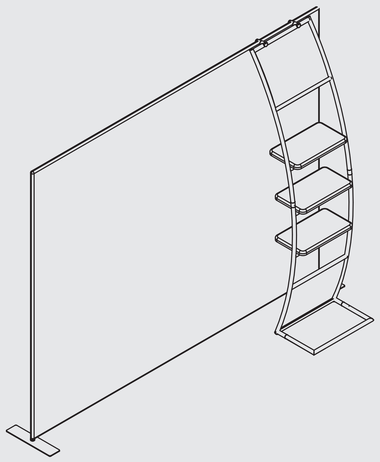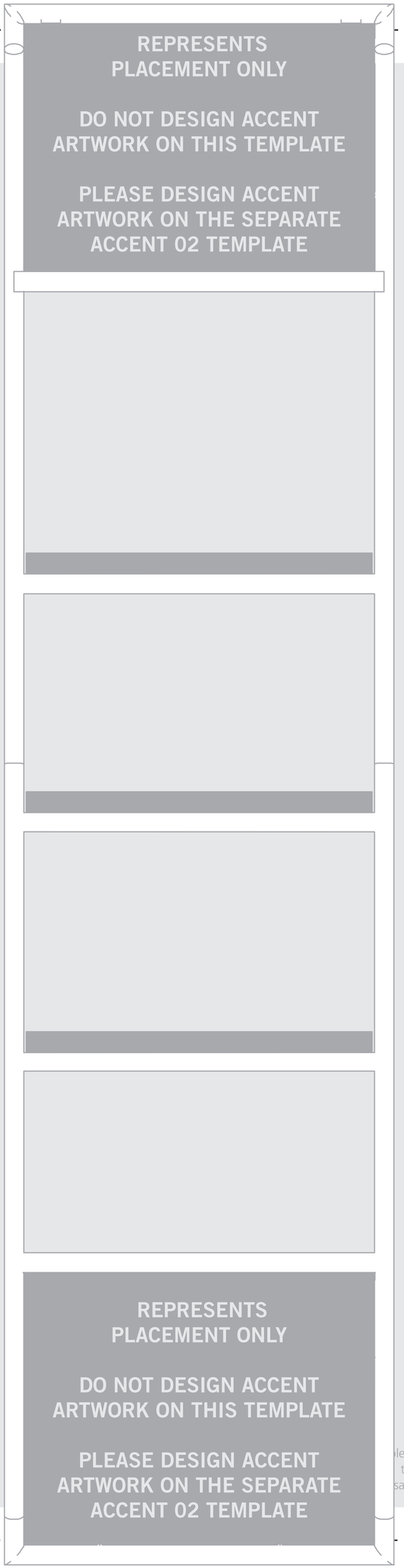
- CMYK Color Mode
- All Solid Coated Pantone colors should be called out in the art as spot colors
- Embed all images and support files
- Resolution must be 100-120 ppi
- All fonts must be created to outlines
- Do not scale artboard
- Background color/images must bleed to the edge of artboard
- Do not use spot colors from template in your artwork as they will not print