1.800.350.7152 ext 222
905.475.2225 ext 222
info@kcbgraphics.com

Formulate:
Header, 6' x 1'

Total Graphic Area: 71.875"w X 12.8125"h
Total Visual Area: 70.875"w X 11.8125"h

Use separate template for backwall graphic. This template only represents the header graphic.

Please be sure to include the 1/2" bleed around the perimeter.

General Art Guidelines:
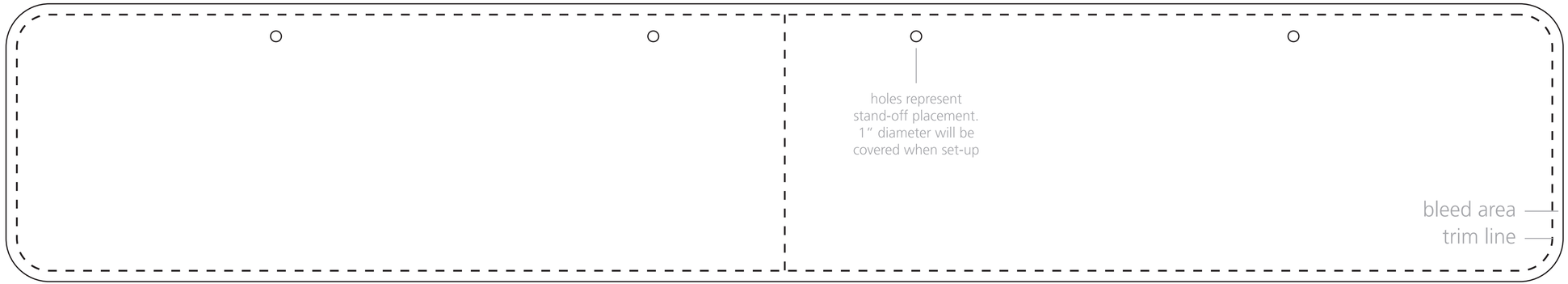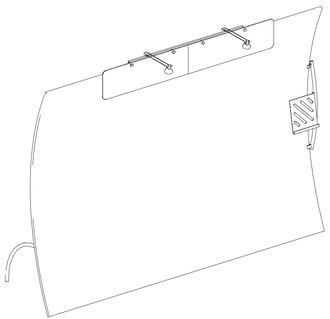
- CMYK Color Mode
- All Solid Coated Pantone colors should be called out in the art as spot colors
- Embed all images and support files
- Resolution must be 100-120 ppi
- All fonts must be created to outlines
- Do not scale artboard
- Background color/images must bleed to the edge of artboard
- Do not use spot colors from template in your artwork as they will not print